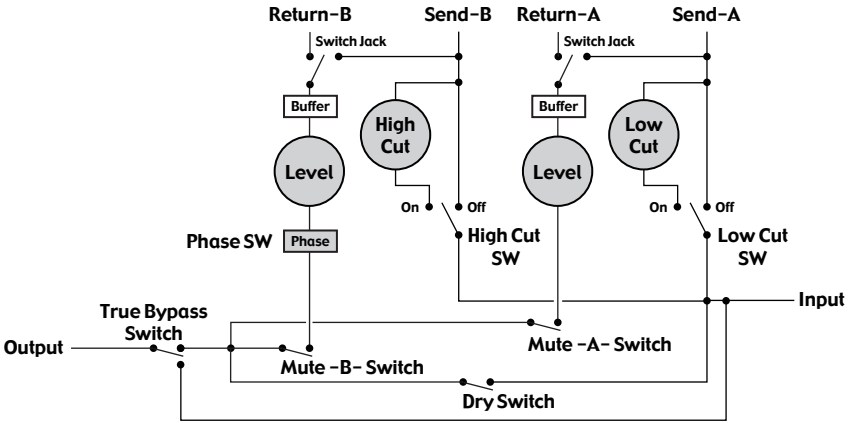
Return-B
Send-B
Return-A
Send-A
Switch Jack
Switch Jack
Buffer
Buffer
High Cut
Low Cut
Level
Level
On
Off
On
Off
Phase SW
Phase
High Cut SW
Low Cut SW
Input
True Bypass Switch
Output
Mute -A- Switch
Mute -B- Switch
Dry Switch